REVISIONS				
ZONE	REV	DESCRIPTION	DATE	APPROVED

NOTES: UNLESS OTHERWISE SPECIFIED.

1. APPLY A LIGHT COAT OF LUBRICANT TO O-RING(S) PRIOR TO ASSEMBLY.
2. SEE TABLE 1 FOR LAMP OPTIONS.
3. SEE TABLE 2 FOR LENS OPTIONS.
4. SEE TABLE 3 FOR MOUNTING OPTIONS.
5. SOME HIDDEN LINES OMITTED FOR CLARITY.
6. ITEM #8 ANTI-SHOCK FOAM CUSHION NOT SHOWN IN VIEW.

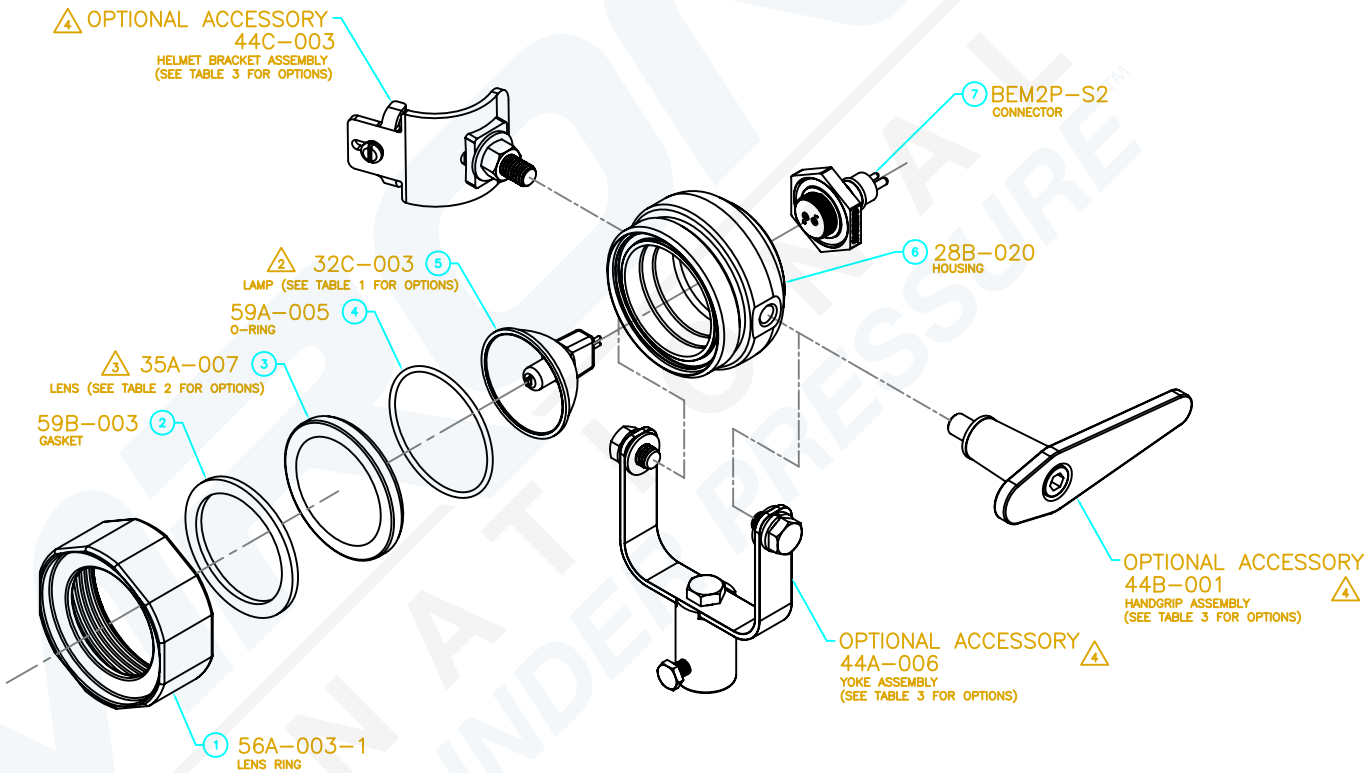

TABLE 1, LAMP OPTIONS

PART NO.	VOLT/WATT
32C-002	12V/50W
32C-003	12V/100W
32C-004	24V/200W
32C-005	24V/250W
32C-006	30V/80W
32C-007	36V/340W

TABLE 2, LENS OPTIONS

PART NO.	COLOR
35A-007	CLEAR
35A-009	FROST
35A-011	BLUE
35A-012	BLUE FROST
35A-014	RED
35A-015	RED FROST

TABLE 3, MOUNTING OPTIONS

PART NO.	DESCRIPTION
44A-006	YOKE ASSEMBLY, XT120
44C-003	HELMET BRACKET ASSY.
44B-001	HANDGRIP ASSEMBLY

QTY REQD	CAGE CODE	PART OR IDENTIFYING NO.	NOMENCLATURE OR DESCRIPTION	MATERIAL SPECIFICATION	ZONE	ITEM NO.
AR		52B-001	ANTI-SHOCK FOAM CUSHION			8
1		BEM2P-S2	SNOOPERETTE CONNECTOR	GRE		7
1		28B-020	HOUSING, SNOOPERETTE LITE	6061-T6 AL.		6
1		32C-003	MR LAMP, 12V/100W	QUARTZ COMM'L		5
1		59A-005	O-RING, 2-139	BUNA 70		4
1		35A-007	LENS, XT120, CLEAR	BOROSILICATE COMM'L		3
1		59B-003	GASKET	SILICONE COMM'L		2
1		56A-003-1	LENS RING, XT120	6061-T6 AL.		1

PARTS LIST

UNLESS OTHERWISE SPECIFIED DIMENSIONS ARE IN INCHES AND PER ASME Y14.5-1994
TOLERANCES ARE: .X ± .015
.XX ± .01
.XXX ± .005
.XXXX ± .0005
∠ ± .5°

FINISH:

SURFACE ROUGHNESS 63
EDGE BREAK .005/.015

DO NOT SCALE DRAWING

NEXT ASSY	USED ON
APPLICATION	

CONTRACT:

DWN	K. WOOD	DATE 060503
CHK		
DESIGN		
ENGR		
QA	J. MAGLAQUE	
APVD	E. BIRNS	

BIRNS
1720 FRINZ PLACE, ONTARIO, CA 91761-1563 U.S.A.
TEL: (909) 467-0360 FAX: (909) 467-0427
www.birns.com

TITLE
SNOOPERETTE
LOW-VOLTAGE LITE
EXPLODED VIEW

SIZE D | CAGE CODE 58608 | DWG NO. 5672-01-20 | REV.

SCALE: 2/1 | UNIT WT.: | SHEET 1 OF 1